SOLENOID VALVES

direct operated
for vacuum service
3/8 - 1/2

NC

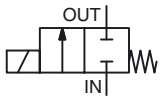

2/2
Series
030

FEATURES

- *Special materials and handling procedures are used in the high vacuum valves to avoid molecular contamination*
- *The medium and high vacuum valves are mass spectrometer tested*
- *Brass bodied solenoid valves designed to provide maximum flow*
- *Direct lift solenoid valves have a resilient soft seating for absolute tight shut-off on low pressures*
- *The solenoid valves do not require a minimum operating pressure*
- *The solenoid valves satisfy all relevant EC Directives*

GENERAL

Differential pressure 1 bar absolute [1 bar =100 kPa]
Response time 5 - 40 ms

fluids (∗)	temperature range (TS)	seal materials (∗)
air, inert gas	- 20°C to + 90°C	NBR (nitrile) FPM (fluoroelastomer)

MATERIALS IN CONTACT WITH FLUID

(∗) Ensure that the compatibility of the fluids in contact with the materials is verified

Body Brass
Core tube Stainless steel
Core and plugnut Stainless steel
Spring Stainless steel
Seat Brass
Seal NBR or FPM
Discs NBR or FPM
Shading coil Copper

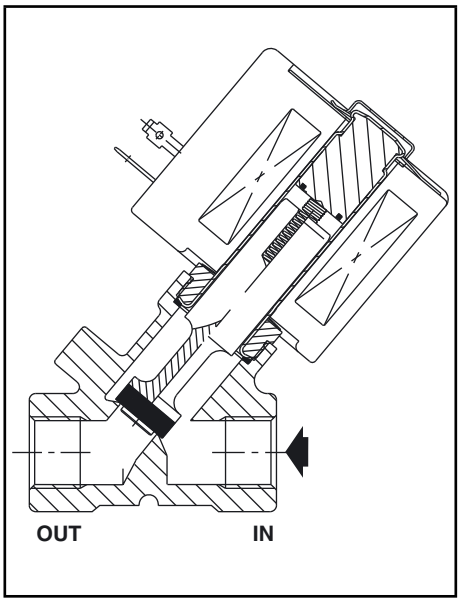

ELECTRICAL CHARACTERISTICS

Coil insulation class F
Connector Spade plug (cable Ø 6-10 mm)
Connector specification ISO 4400 / EN 175301-803, form A
Electrical safety IEC 335
Electrical enclosure protection Moulded IP65 (EN 60529)
Standard voltages DC (=) : -
(Other voltages and 60 Hz on request) AC (~) : 24V - 48V - 115V - 230V / 50 Hz

prefix option	power ratings				operator ambient temperature range (TS)	replacement coil		type [1]
	inrush ~	holding ~		hot/cold =		~	=	
	(VA)	(VA)	(W)	(W)	(C°)	230 V/50 Hz	-	
SC	55	23	10,5	-	-20 to + 75	400425-117	-	01
	110	33,6	15,4	-	-20 to + 75	400525-117	-	02

[1] Refer to the dimensional drawings on the following page.

SPECIFICATIONS

pipe size	orifice size	flow coefficient Kv		minimum absolute vacuum pressure (PS) air (∗)	power coil (W)		catalogue number	options		
								maintained man. operator		
Rp	(mm)	(m^3/h)	(l/min)	mbar (Torr)	~		~			
NC - Normally closed, low vacuum range to 25 Torr, NBR seals										
3/8	9	1,5	25	33,3 (25)	10,5	-	**SCE030B013**	-	-	-
1/2	11	2,4	40	33,3 (25)	15,4	-	**SCE030A017**	-	-	-
NC - Normally closed, medium vacuum range to 10^{-3} Torr, NBR seals										
3/8	9	1,5	25	$1,33.10^{-3}$ (10^{-3})	10,5	-	**SCE030B013VM**	-	-	-
1/2	11	2,4	40	$1,33.10^{-3}$ (10^{-3})	15,4	-	**SCE030A017VM**	-	-	-
NC - Normally closed, high vacuum range to 10^{-6} Torr, FPM seals										
3/8	9	1,5	25	$1,33.10^{-6}$ (10^{-6})	10,5	-	**SCE030B013VH**	-	-	-
1/2	11	2,4	40	$1,33.10^{-6}$ (10^{-6})	15,4	-	**SCE030A017VH**	-	-	-

H

АРХИМЕД
ТОРГОВО-ИНЖЕНЕРНЫЙ ЦЕНТР
+7(495)788-54-55 www.airar.ru info@airar.ru

OPTIONS

- Waterproof enclosure with embedded screw terminal coil according to protection class IP67, CEE-10
- Explosionproof enclosures for use in zones 1/21-2/22, categories 2-3 to ATEX Directive 94/9/EC (see “Explosionproof solenoids” section)
- Electrical enclosures according to “NEMA” standards are available
- Compliance with “UL”, “CSA” and other local approvals available on request
- Mounting brackets, suffix MB
- Other pipe connections are available on request
- Plug with visual indication and peak voltage suppression or with cable length of 2 m (see Solenoids, Coils & Accessories section)

INSTALLATION

- The solenoid valves can be mounted in any position without affecting operation
- Pipe connection identifier is E = Rp (ISO 7/1)
- Installation/maintenance instructions are included with each valve

SPARE PARTS KITS & ACCESSORIES

catalogue number	spare parts kit no.		mounting bracket no.
	~	=	
SCE030B013	**C302788**	**-**	**093200-001**
SCE030A017	**C302790**	**-**	**093200-001**

(1) Standard prefixes/suffixes are also applicable to kits.

ORDERING EXAMPLES:

SC	E	030 **B** 013		230V / 50 Hz
SC	E	030 **B** 013	**MO**	115V / 50 Hz
SC	E	030 **A** 017	**VM**	24V / 50 Hz
SC	E	030 **A** 017	**VH**	230V / 50 Hz

prefix — pipe thread — basic number — suffix — voltage

ORDERING EXAMPLES KITS:

C302788(1)	
C302788	**VM**
C302788	**VH**

basic number — suffix

DIMENSIONS (mm), WEIGHT (kg)

TYPE 01-02
Prefix “SC” Solenoid
Epoxy moulded
IEC 335 / ISO 4400
IP65

Type 01: SCE030B013/B013VM/B013VH
Type 02: SCE030A017/A017VM/A017VH

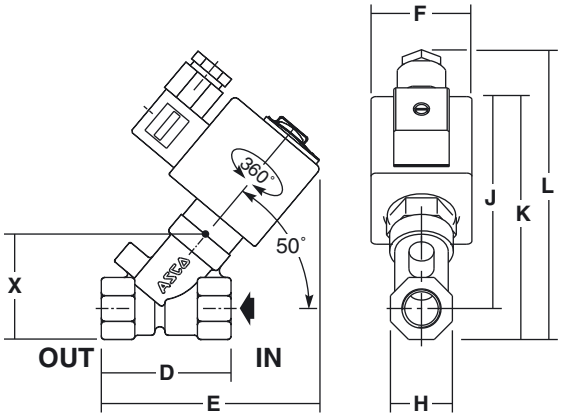

type	prefix option	A	B	C	D	E	F	H	J	K	L	X	weight (2)
01	SC	-	-	-	48	80	45	22	84	95	126	36	0,5
02	SC	-	-	-	58	98	50	28	94	108	128	42	0,9

(2) including coil and connector.

АРХИМЕД
ТОРГОВО-ИНЖЕНЕРНЫЙ ЦЕНТР
+7(495)788-54-55 www.airar.ru info@airar.ru