HIGH PERFORMANCE CYLINDERS

DOUBLE ACTING, Ø 32 to 80 mm

ISO 15552 - AFNOR ISO 15552 - DIN ISO 15552

SERIES 450-453 - TYPE: **PES OMEGA**

B

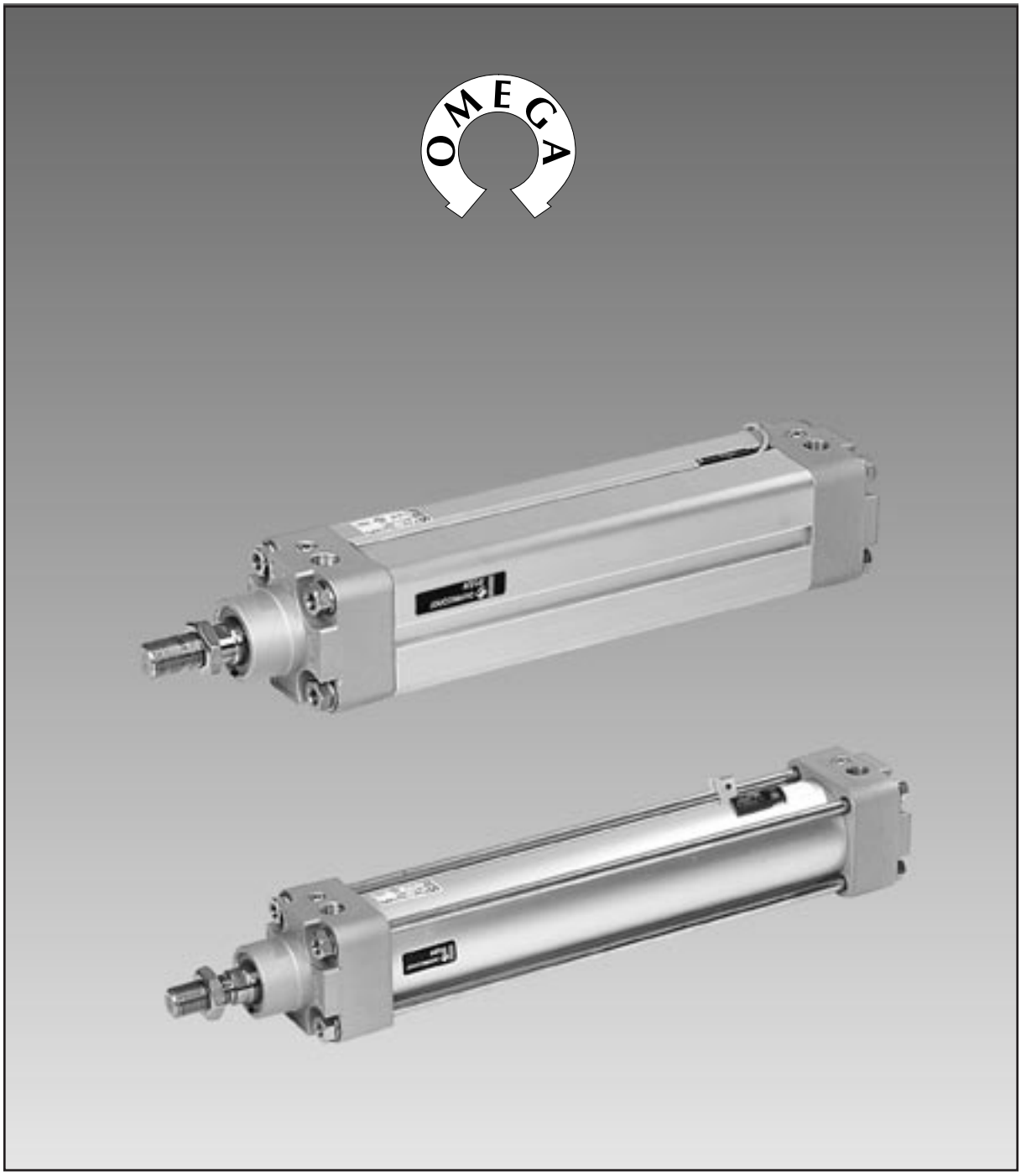

P231-GB-R4

ASCO®
JOUCOMATIC

HIGH PERFORMANCE CYLINDERS: TYPE PES Ω

The PES Ω cylinders offer remarkable performance:

• Low break away pressure

- A few millibars are sufficient to set the piston rod unit in movement, the minimum pressure depending only on its weight, the effects of friction and stickslip are negligible.

• High sensitivity

- Nominal travel with a very low differential pressure
- Performance obtained by substantially-improved efficiency.

• Perfectly adapted to very low speeds ...

• And also for very high speeds

- With this type of cylinder, 3 m/sec. is possible !

• Long service life

- Service life of more than 10,000 km, representing longer endurance than required as defined in standards recommended for industrial applications.

These exceptional features are the result of extensive research conducted by JOUCOMATIC, notably involving the development of a patented sealing system (nb. 9603098) consisting of an **omega** formed piston seal.

DEFINING THE PART NUMBER OF A Ø 32 TO 80 mm ISO/AFNOR/DIN AIR CYLINDER

• CYLINDER WITH PROFILED BARREL : **PES Ω .. P A .... – DM**

Cylinder type
Cylinder Ø (in mm)
Cylinder with profiled barrel: suffix **P**
End-of-stroke adjustable pneumatic cushioning: suffix **A**
Length of stroke (in mm)
Air cylinder designed to receive magnetic position detectors (amagnetic tube) = suffix **DM**

• CYLINDER WITH TIE RODS : **PES Ω .. A .... R – DM**

Cylinder type
Cylinder Ø (in mm)
End-of-stroke adjustable pneumatic cushioning: suffix **A**
Length of stroke (mm)
Tie rod and cylindrical barrel version: suffix **R**
Air cylinder designed to receive magnetic position detectors (amagnetic tube) = suffix **DM**

ORDERING

When ordering, please specify:

AIR CYLINDER
Cylinder code followed by stroke (in mm) **45. .. ..**
or the cylinder part number (see above) **PES Ω ..**

MOUNTINGS
The code or codes and quantity of any mountings : **434 .. ...**

DETECTORS
The code and quantity of any magnetic detectors (if required) : **881 .. ...**
The code and quantity of mountings : **881 .. ...**

CONTENTS

*Double acting air cylinder Ø 32-80 mm with **tie rods*** — *page 3*
*Double acting air cylinders Ø 32-80 mm with **profiled barrel*** — *page 5*
Mountings — *P242*

Series 450
Type: PES Ω R-DM

CYLINDERS WITH TIE RODS

DOUBLE ACTING CYLINDERS Ø 32 to 80 mm

equipped for magnetic position detectors
Conforming with ISO-AFNOR-DIN standards
With adjustable pneumatic cushioning
cylinders with tie rods

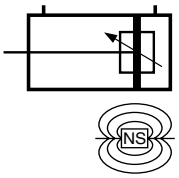

B

SPECIFICATION

FLUID	: air or neutral gas, filtered, lubricated or not
PRESSURE	: 10 bar max.
TEMPERATURE	: –25°C at +80°C (without position detectors) (for higher temperatures, consult us) –20°C at +70°C (with position detectors)
OPTIMAL MAX. SPEED	: ≤ 1 m/s (for optimal service life)
MAX. SPEED RATE	: 3 m/s (at 20°C)
STANDARDS	: **ISO 15552-AFNOR NF ISO 15552-DIN ISO 15552** (replace ISO 6431-AFNOR NFE 49003-VDMA 24562)

CONSTRUCTION

Cylindrical barrel	: hard anodized aluminium alloy (non magnetic)
Tie rods	: stainless steel
Rod	: hard chrome plated steel
Piston	: light alloy fitted with a permanent magnet
Piston seal	: polyurethane (PUR)
Cushioning seals	: polyurethane (PUR)
Front and rear ends	: aluminium alloy
Bearing	: metal self lubricating
Rod nut	: galvanized steel
Cushioning	: pneumatic, adjustable from both sides with captive screws

CHOICE OF EQUIPMENT (CUSHIONIED CYLINDER)

Bore Ø (mm)	**CODES** (1)	REFERENCES (1) (2)	Connection Ø	Cushioning length (mm)
32	**45050975**(1)	PES 32 Ω A (1) R-DM	G 1/8	18
40	**45050976**(1)	PES 40 Ω A (1) R-DM	G 1/4	20
50	**45050977**(1)	PES 50 Ω A (1) R-DM	G 1/4	26
63	**45050978**(1)	PES 63 Ω A (1) R-DM	G 3/8	26
80	**45050979**(1)	PES 80 Ω A (1) R-DM	G 3/8	27

(1) Indicate stroke (in mm) preferably selecting one of this standard strokes below. Do not exceed maximum possible stroke.
(2) **The magnetic position detectors are ordered separately** COMPACT model, type ILS or magnéto-résistive (see P293) UNI model, reed switch or magneto-resistive type (see P295) or BIM model, magneto-inductive (see P297)

STANDARD STROKES (●: rapidly available) - MAX. STROKES

Bore Ø (mm)	Standards strokes (mm)												Max. stroke capabilty (mm)
	25	50	80	100	125	160	200	250	320	400	500	630	
32	●	●	●	●	●	●	●	●					1000
40	●	●	●	●	●	●	●	●	●	●			1500
50	●	●	●	●	●	●	●	●	●	●	●	●	1800
63	●	●	●	●	●	●	●	●	●	●	●	●	1800
80	●	●	●	●	●	●	●	●	●	●	●	●	2000

Other strokes on request

MOUNTINGS: see page P242

DIMENSIONS: see page P232-9

POSITION OF THE T-SLOT AND THE DOVETAIL GROOVES

Series 453 PES cylinders offer the advantage of being able to position the T-slot grooves on the cylinder in 4 different positions with reference to the axes of the pressure supply ports. The position must be specified when defining the cylinder code.

STANDARD POSITION OF THE T-SLOT GROOVES

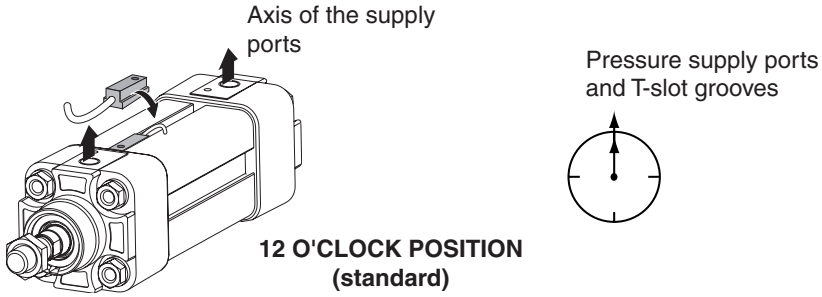

Ø 32 mm	Ø 40 mm	Ø 50 mm	Ø 63 -80 mm
3 T-slot grooves	3 T-slot grooves	4 T-slot grooves	4 T-slot grooves
1 dovetail groove	2 dovetail grooves	3 dovetail grooves	4 dovetail grooves

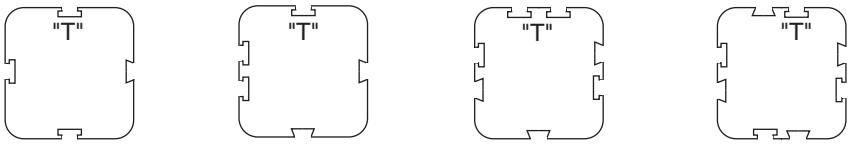

OTHER POSSIBLE POSITIONS (consult us)

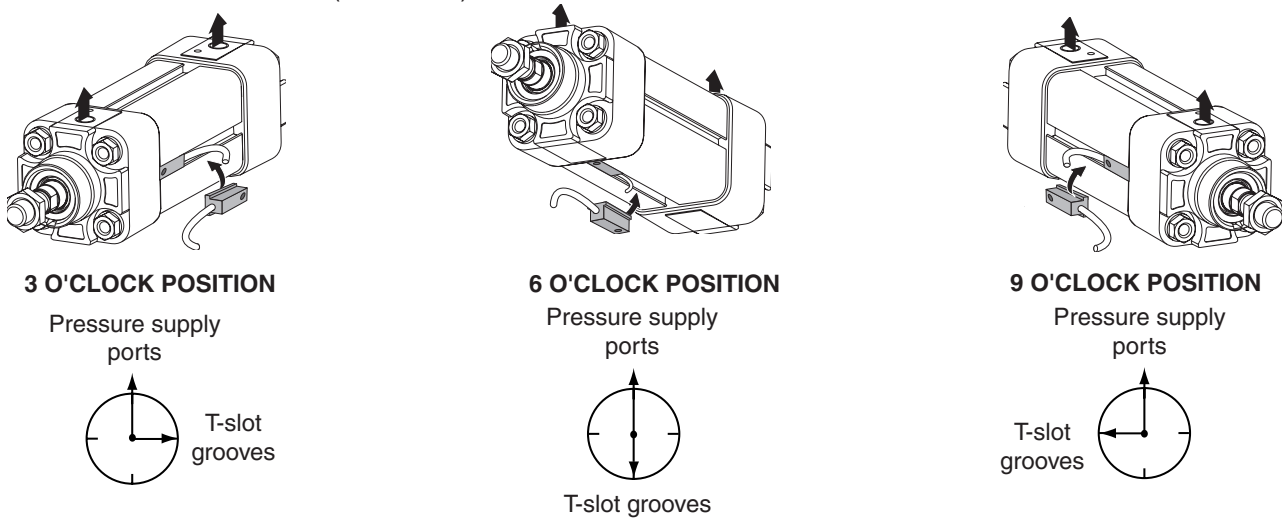

Series 453
Type:PES Ω P-DM

CYLINDERS WITH PROFILED BARREL

DOUBLE ACTING CYLINDERS Ø 32 to 80 mm

equipped for magnetic position detectors
Conforming with ISO-AFNOR-DIN standards
With adjustable pneumatic cushioning

Cylinders with profiled barrel for flush-mount detectors

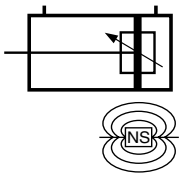

B

SPECIFICATION

FLUID	:	air or neutral gas, filtered, lubricated or not
PRESSURE	:	10 bar max.
TEMPERATURE	:	–25°C at +80°C (without position detectors) (for higher temperatures, consult us) –20°C at +70°C (with position detectors)
OPTIMAL MAX. SPEED	:	≤ 1 m/s (for optimal service life)
MAX. SPEED RATE	:	3 m/s (at 20°C)
STANDARDS	:	**ISO 15552-AFNOR NF ISO 15552-DIN ISO 15552** (replace ISO 6431-AFNOR NFE 49003-VDMA 24562)

CONSTRUCTION

Barrel	:	non-magnetic, hard anodized aluminium alloy
Front and rear ends	:	aluminium alloy
Barrel/end connection	:	with stainless steel tie-rods
Bearing	:	self-lubricating metal
Cushioning seals	:	polyurethane (PUR)
Cushioning	:	pneumatic, adjustable from both sides with captive screws
Rod	:	hard chrome plated steel
Rod nut	:	galvanized steel
Piston	:	acetal resin (POM), or light alloy fitted with an annular permanent magnet
Piston seal	:	polyurethane (PUR)

CHOICE OF EQUIPMENT

DEFINING THE CYLINDER CODE

Standard version: profiled barrel with adjustable pneumatic cushioning, equipped for magnetic position detectors (T-slot grooves in 12 o'clock position).

When ordering, please specify:

- AIR CYLINDER
  - The air cylinder type (profiled, with cushioning, equipped for magnetic position detection).
  - The position of the T-slot groove or dovetail groove on the cylinder.
  - The cylinder diameter and its stroke.
- DETECTORS: The magnetic position detectors must be ordered separately:
  - Model for T-slot groove, Reed switch or magneto-resistive type (see leaflet P292),
  - COMPACT model, Reed switch or magneto-resistive type (see leaflet P293)

453 5 . . . . . .

TYPE DE VERIN			Type
Barrel	Cushioning	Position detection	
Profiled barrel	Cushioned	Equipped	**0L**

GROOVE POSITION		Type
Position of the T-slot grooves on the profiled PES cylinder	12 o'clock	**0**
	3 o'clock	**3**
	6 o'clock	**6**
	9 o'clock	**9**
Position of the dovetail grooves on the profiled PES cylinder	12 heures	**9**
	3 heures	**0**
	6 heures	**3**
	9 heures	**6**

Ø Bore (mm)	Standard strokes (mm) (1) (recommended standard strokes)												Max. strokes (mm)
	25	50	80	100	125	160	200	250	320	400	500	630	
32	●	●	●	●	●	●	●	●					1000
40	●	●	●	●	●	●	●	●	●	●			1500
50-63	●	●	●	●	●	●	●	●	●	●	●	●	1800
80	●	●	●	●	●	●	●	●	●	●	●	●	2000

(1) Other strokes on request.

Ø CYLINDER	
Type	Ø bore (mm)
3	32
4	40
5	50
6	63
8	80

Ordering example:
- profiled cylinder with pneumatic cushioning equipped for detectors = **0L**
- T-slot grooves at 3 o'clock position = **3**
- Cylinder Ø 80 mm = **8**
- Stroke 100 mm = **0100**

Ordering code: **45350L380100**

ACCESSORIES: Protective groove cover and detector cable holder - see leaflet P292 or P293

MOUNTINGS: see page P242

DIMENSIONS: voir page P229-8

PES Ω CYLINDERS WITH PROFILED BARREL AND TIE RODS

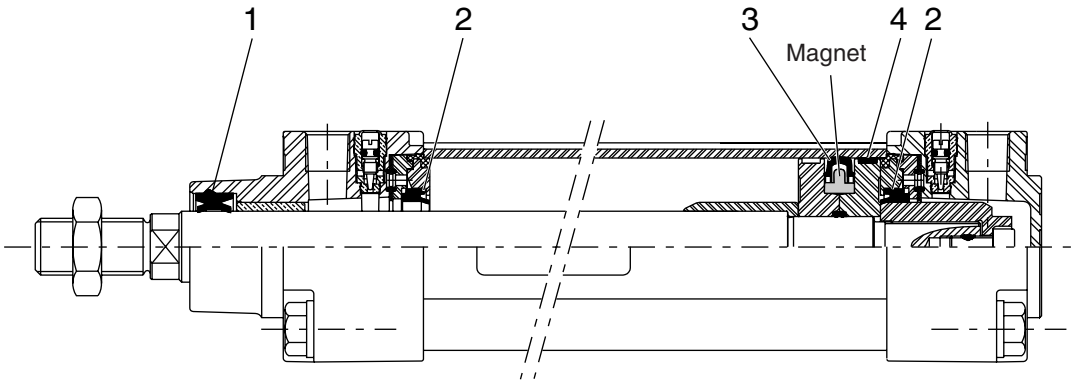

Ø Cylinder	Cylinder type	**CODES** SPARE PARTS seals: 1 to 4
32	Equipped for detector	**97802060**
40	Equipped for detector	**97802061**
50	Equipped for detector	**97802062**
63	Equipped for detector	**97802063**
80	Equipped for detector	**97802064**

NOTE: For best results, use grease supplied in each kit. Supplementary tube available (11 cm^3) on request, code: **97802100**

ASCO/JOUCOMATIC reserves the right to alter the availability and specifications without notice.